Wet multi disc brake 8,75"

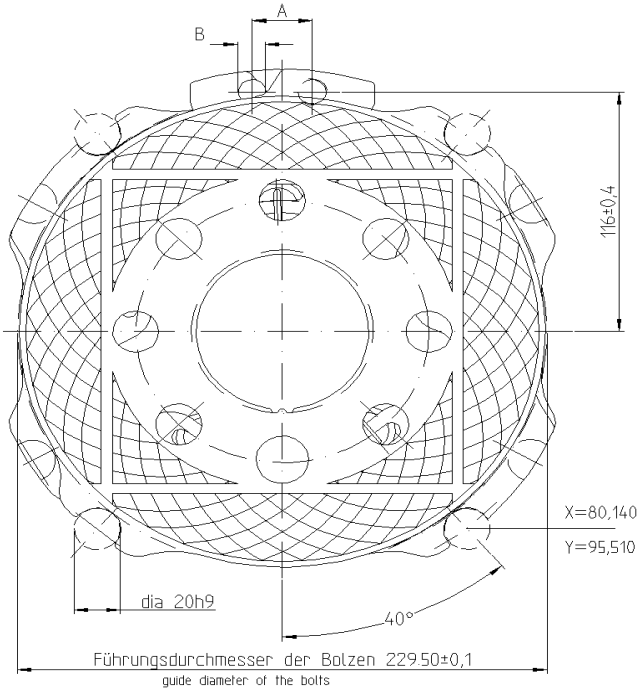

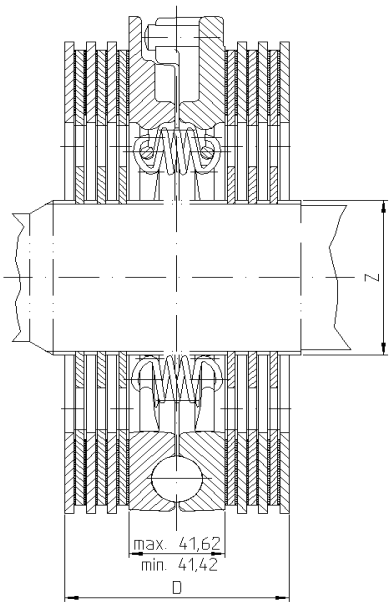

special types on request

Art. no.	max. brake-torque [Nm]	lining-quality	lining type	groove pattern	ramp angle	Monoservo/ Multiservo	number of lining discs	number of intermediate discs	D	A	B	Spline (Z)
13089	4700	HS 48	Sinter	Sunburst	30	Multi	6	6	87,04	26	12	N 75x2x30x36-9H DIN 5480
13285	3150	HS 48	Sinter	Sunburst	30	Multi	4	4	71,9	26	12	A 100x94 DIN 5482
13292	6200	HS 48	Sinter	Sunburst	30	Multi	8	8	102,18	26	12	A 100x94 DIN 5482
13724	5450	HS 48	Sinter	Sunburst	30	Multi	7	7	94,61	26	12	N 75x2x30x36-9H DIN 5480
14319	4300	HO 112.5	Papier	Waffelnut	28	Mono	4	2	67,56	22	12	N 72x60 DIN 5480
101091	2150	HO 112.5	Papier	Waffelnut	28	Mono	2	0	50,55	22	12	N 72x60 DIN 5480
101092	4300	HO 112.5	Papier	Waffelnut	28	Mono	4	2	67,56	22	12	N 72x60 DIN 5480
101918	3140	HS 48	Sinter	Sunburst	30	Multi	4	2	66,55	26	12	N 75x2x36xH9 DIN 5480
101949	7555	HO 24,5	Papier	Waffelnut	30	Multi	6	6	87,04	26	12	N 55x2x26xH9 DIN 5480
102421		HO 112.5	Papier	Waffelnut	30	Multi	4	4	71,9	26	12	N 60x2x28xH9 DIN 5480
102627		HDT 303	Graphit	Waffelnut	35	Multi	6	6	87,04	26	12	N 60x2x28xH9 DIN 5480
103078	7800	HDT 303	Graphit	Waffelnut	30	Multi	6	6	87,04	26	12	N 55x2x26xH9 DIN 5480

D-83125 Eggstätt
Obinger Straße 15

Postfach 20
Telefon (08056) 906-0

E-Mail: Info@knott.de
http://www.knott.de

Telefax Sales dept. (08056) 906-103
Telefax Design dept. (08056) 906-106